German Quality
Better components, better care

DEWERT
A DewertOkin Technology Brand

Iproxx AC 2 Display

HANDSET

30%~70%

+10~40°C

Standard configurations:

Indicators	7
Keys	25
Locking	Independent function electronic lock
Installation	Hook
Customizable parts	Key function and foil pattern
Display screen	LCD color

Drawings:

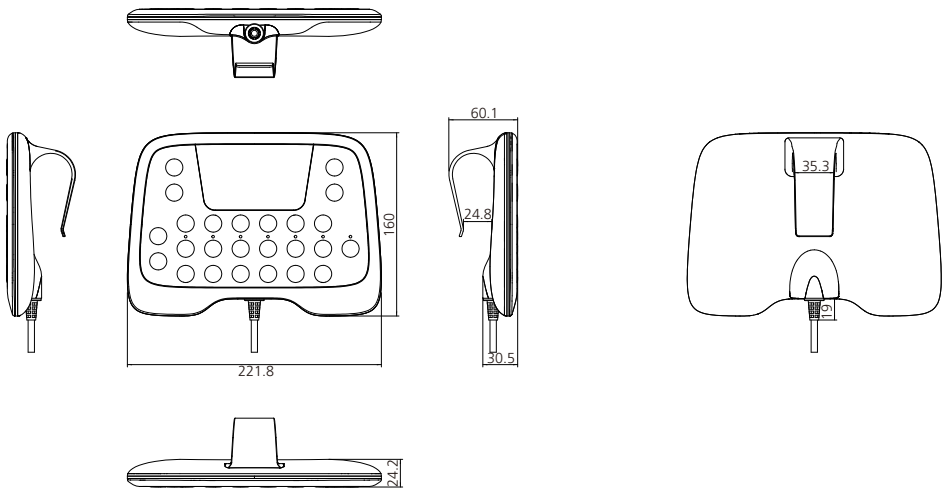

sales@dewertokin-technology.com | www.dewertokintechnology.com | +86-(0)573-8228-1028