**German Quality**
Better components, better care

DEWERT
A DewertOkin Technology Brand

# JLDQ.20M

## SINGLE DRIVE

24-29V

**100W**
Rated Power

**IPX4**
Protection

+5~40°C

Cycles:
≥ 15000

## Standard configurations:

| | |
|---|---|
| Duty cycle | Max 1min on / 8min off |
| Installation size | 150+stroke (20-400mm) |
| Max load | 4000N |
| Certification standard | IEC60601-1 |
| Noise without loading | ≤50dB(A)@500mm |
| Installation mode | 0° |
| Feedback | Hall sensor |

## Drawings:

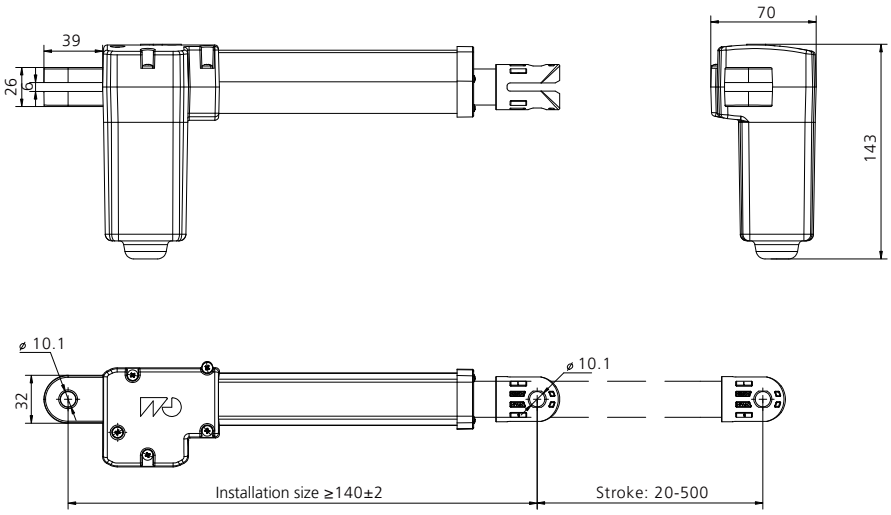


sales@dewertokin-technology.com | www.dewertokintechnology.com | +86-(0)573-8228-1028